RCQK

Catalogue Series RCC

Constant Air Volume Regulator

Product description

Constant air volume rectangular regulator, Koolair model **RCQK**, for use in supply or extract systems. The unit is self regulating and will operate independant of pressure variations within the system. Casing and damper blade are manufactured from galvanised sheet steel. Air flow rate is factory set, and the unit is easily adjustable on site to a high rate of accuracy. Minimum inlet pressure required is 50 Pa.
Can be mounted either horizontally or vertically.
Can be supplied with 50 mm of thermoacoustic insulation **(RCQK-D)**.

Option to include rectangular silencer to attenuate noise regenerated in air volume control unit, **PAK** for supply (length of attenuator baffles equal to total length of silencer) and **PAKRT** for return (length of attenuator baffles 500 mm less than total length of silencer).

The constant volume flow controller, model **RCQK**, meets the specifications set out in EN 1751, obtaining class “C” air tightness for the casing of the controller.

Models

RCQK. Constant Volume rectangular regulator without insulation equipped with adjustment mechanism box.
RCQK-D. Constant Volume rectangular regulator with insulation equipped with adjustment mechanism box.
RCQK-MT. Uninsulated mechanical rectangular constant flow regulator with electric servomotor (All-or-Nothing-Control or 0-10V).
RCQK-D-MT. Insulated mechanical rectangular constant flow regulator with electric servomotor (ON-OFF Control or 0-10V).

General dimensions

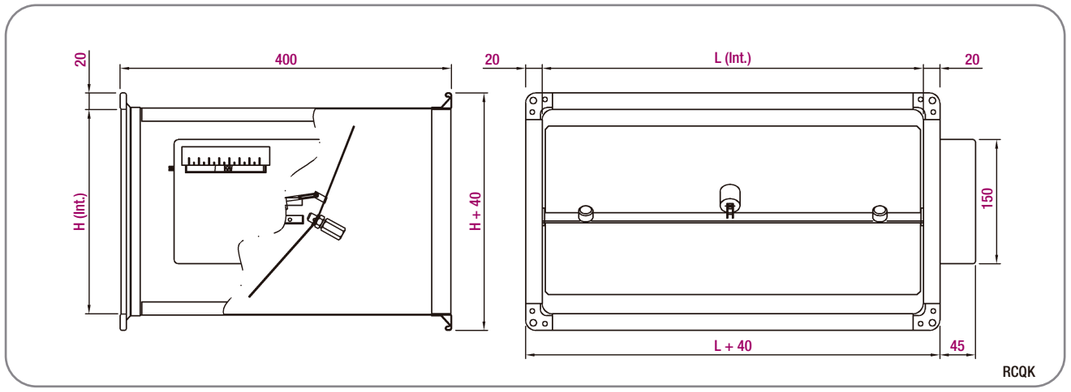

Dimensions Type 1

Model (L x H)	Model (L x H)
200 x 100	400 x 300
200 x 200	500 x 200
300 x 100	500 x 250
300 x 150	500 x 300
300 x 200	600 x 200
400 x 200	600 x 250
400 x 250	600 x 300

Unit mm

Dimensions Type 2

Model (L x H)	Model (L x H)
400 x 400	600 x 400
500 x 400	600 x 500
500 x 500	

Unit mm

Dimensions Type 3

Model (L x H)	600 x 600

Unit mm

Installation requirements

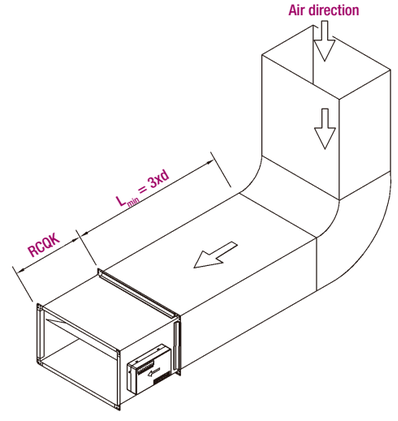

d = rectangular duct hydraulic diameter
d = 4 x (L x H) / 2 x (L + H)
L x H = rectangular duct dimension

Possibility of horizontal and vertical installation.

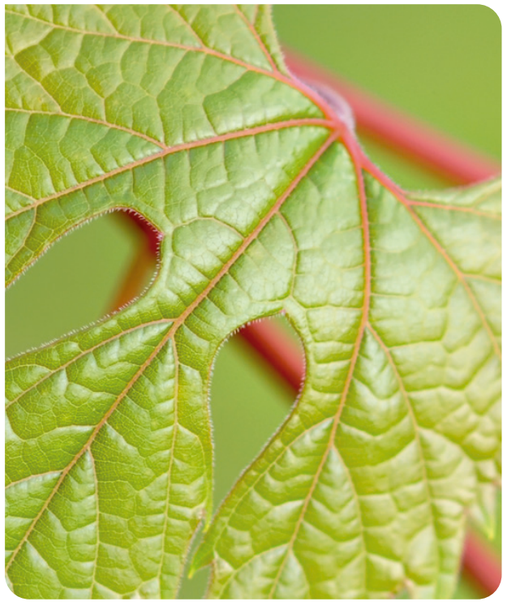

RCQK

Selection table

Size	Q (m³/h)	ΔP_{min} (Pa)	Regenerated noise Sound pressure L_{PA} dB(A)		Radiated noise Sound pressure L_{PA2} dB(A)	
			ΔP = 100 Pa	ΔP = 500 Pa	ΔP = 100 Pa	ΔP = 500 Pa
200 x 100	170	50	28	44	<20	30
	370	50	34	50	20	36
	600	50	37	53	23	39
200 x 200	350	50	33	49	<20	35
	830	50	40	56	26	42
	1600	50	43	59	29	45
300 x 100	260	50	31	47	<20	33
	590	50	37	53	23	39
	900	50	40	56	26	42
300 x 150	375	50	34	50	20	36
	1030	50	41	57	27	43
	1600	50	45	61	31	47
300 x 200	450	50	35	51	21	37
	1340	50	43	59	29	45
	1850	50	46	62	32	48
400 x 200	800	50	42	57	28	45
	1800	50	45	60	31	46
	2900	50	47	62	33	48
400 x 250	830	50	42	57	28	43
	2220	50	45	61	31	47
	3100	50	47	62	33	48
400 x 300	1200	50	33	50	<20	36
	2730	50	42	59	28	45
	4500	50	48	65	34	51
400 x 400	1600	50	44	60	30	47
	3640	50	51	67	37	53
	5800	50	55	71	41	57

LEGEND

Q (m³/h): Air flow.

L_{PA}: Sound pressure level of the regenerated noise. in dB(A). considering a room attenuation of 10 dB/oct.

L_{PA2}: Sound pressure level of the radiated noise. in dB(A). considering a room attenuation of 10 dB/oct.

ΔP_{min}: Minimal differential pressure in Pa.

ΔP = 100/500 Pa: Differential pressure in Pa (measured at the inlet and outlet of the unit).

Selection table

Size	Q (m³/h)	ΔP_{min} (Pa)	Regenerated noise Sound pressure L_{PA} dB(A)		Radiated noise Sound pressure L_{PA2} dB(A)	
			ΔP = 100 Pa	ΔP = 500 Pa	ΔP = 100 Pa	ΔP = 500 Pa
500 x 200	850	50	42	57	28	43
	2240	50	46	61	32	47
	3300	50	47	63	33	49
500 x 250	1075	50	34	50	20	36
	2810	50	44	61	30	47
	4000	50	48	65	34	51
500 x 300	1400	50	43	59	29	45
	3380	50	50	67	36	53
	5300	50	55	71	41	57
500 x 400	2100	50	43	59	29	46
	4500	50	48	65	34	53
	6300	50	51	67	37	57
600 x 200	950	50	30	47	<20	33
	2325	50	41	57	27	43
	3700	50	46	62	32	48
600 x 250	1200	50	41	58	27	44
	3220	50	50	66	36	52
	4600	50	53	70	39	56
600 x 300	1550	50	41	57	27	43
	4050	50	48	64	34	50
	5700	50	50	66	36	52
600 x 400	2140	50	43	59	29	45
	4770	50	49	65	35	51
	7400	50	52	68	38	54
600 x 600	3300	50	46	62	32	48
	8100	50	52	69	38	55
	11600	50	55	71	41	57

LEGEND

Q (m³/h): Air flow.

L_{PA}: Sound pressure level of the regenerated noise. in dB(A). considering a room attenuation of 10 dB/oct.

L_{PA2}: Sound pressure level of the radiated noise. in dB(A). considering a room attenuation of 10 dB/oct.

ΔP_{min}: Minimal differential pressure in Pa.

ΔP = 100/500 Pa: Differential pressure in Pa (measured at the inlet and outlet of the unit).