20-DH/21-DH

Catalogue Series 20.1

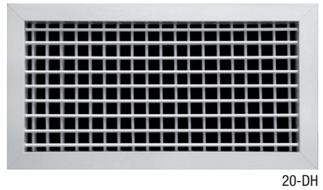

20-DH

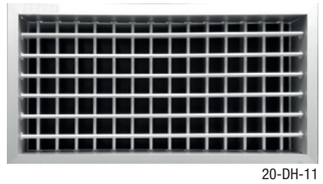

20-DH-11

Double deflection grilles

Product description

Double deflection grille, KOOLAIR, model **20-DH**, of dimensions LxH, for supplying air with horizontal and vertical blades, individually adjustable. It can incorporate volume control damper **(-O)** and fixation accessory to be determined.
Finished in anodised aluminium or any RAL colour upon request.

Other models

20-DV. Double deflection grille, first blades in vertical position, made in aluminium.
20-DH-11. Double deflection grille, first blades in horizontal position, with 11 mm wide aesthetic aluminium frame.
20-DV-11. Double deflection grille, first blades in vertical position, with 11 mm wide aesthetic aluminium frame.
21-DH. Double deflection grille, first blades in horizontal position, made in steel sheet.
21-DV. Double deflection grille, first blades in vertical position, made in steel sheet.

Mounting

With pressure clips. Mounting frame needed (**-MM**). Not available for 11mm frame, 20-DH-11 and 20-DV-11.
Conceled fixing (**-SFO**). Mounting frame needed (**-MM**).
Concealed fastening system for installation in ceilings or walls with a thickness of between x and x without the need for a metal mounting frame (**-SFO-PT**). Not available for 20-DH and 20-DV.
With screws (**-T**). Without indication, the grille is provided with holes for screwing the mounting frame. Not available for 11mm frame, 20-DH-11 and 20-DV-11.
With mounting bridge (**-PM**). Accessory available for 11 mm frame, 20-DH-11 and 20-DV-11.
With plenum box made of galvanised steel sheet, side or top entry connection (**-PE21/20**).
Not available for 11mm frame, 20-DH-11 and 20-DV-11.
With plenum box that can be dismantled via bridges, with side or top (front) connection (**-PDL or -PDS**).
Available for 11 mm frame, 20-DH-11 and 20-DV-11.
Optional internal insulation in the plenum box (**-A**).

General dimensions

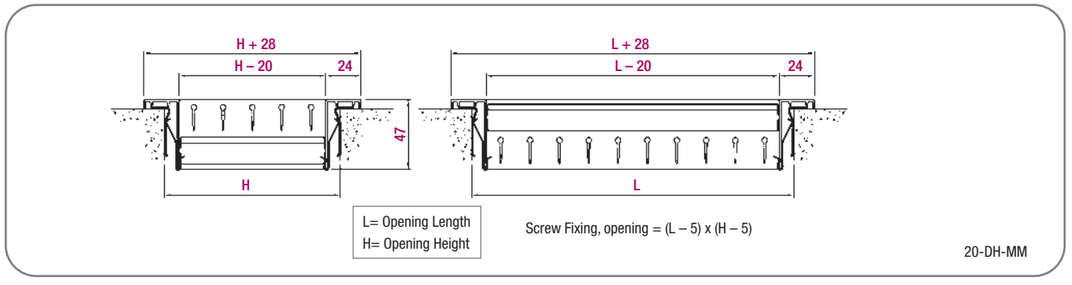

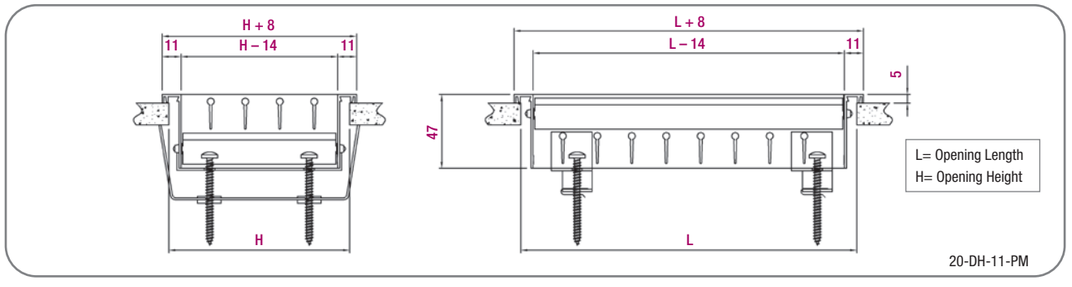

Selection table

Dimension	Q (m³/h)	L_{WA} [dB(A)]	ΔP_t (Pa)	X (m)	V_k (m/s)
200 x 100	160	24	8	2,7	4,5
	220	32	16	3,7	6,2
	310	40	31	5,2	8,8
300 x 100 200 x 150	220	24	7	3,0	4,2
	310	32	14	4,3	5,9
	430	40	26	5,9	8,1
300 x 150	310	24	6	3,5	3,9
	435	32	12	4,9	5,5
	600	40	23	6,8	7,6
600 x 100 400 x 150 300 x 200	390	24	5	3,8	3,7
	540	32	10	5,3	5,1
	760	40	21	7,4	7,2
500 x 150	460	24	5	4,0	3,5
	650	32	10	5,7	4,9
	910	40	19	7,9	6,9
600 x 150 300 x 300	540	24	5	4,3	3,4
	760	32	9	6,1	4,8
	1050	40	17	8,4	6,6
600 x 200 500 x 250 400 x 300	720	24	4	4,8	3,2
	1000	32	8	6,7	4,5
	1350	40	14	9,0	6,0
1000 x 150 600 x 250 500 x 300	800	24	4	4,9	3,0
	1120	32	7	6,9	4,2
	1550	40	14	9,6	5,9
1100 x 200	1150	24	3	5,7	2,8
	1625	32	6	8,0	3,9
	2260	40	12	11,2	5,5
1200 x 250 1000 x 300	1510	24	3	6,4	2,7
	2080	32	5	8,8	3,7
	2910	40	11	12,3	5,2

The Selection Table shows a summary of dimensions. Other sizes available. Consult the Sales Department.

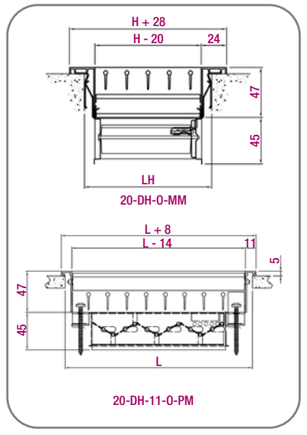

LEGEND

Q (m³/h): Air flow.
L_{WA} [dB(A)]: Sound power level.
ΔP_t (Pa): Total pressure loss.
X (m): Throw for a maximum velocity of 0.25 m/s at the occupied zone $\Delta T = -10$ ºC (cold), installed at 2.7 m of height, with ceiling effect.
V_k (m/s): Effective velocity.